DYN4 Servo Drive Setting

1. Set DYN4 servo drive Enable logic to ACTIVE LOW
2. Set DYN4 servo drive into Pulse/Dir Command Input Mode
3. Set DYN4 servo drive into Position Servo Mode
4. Set GEAR_NUM to 8000

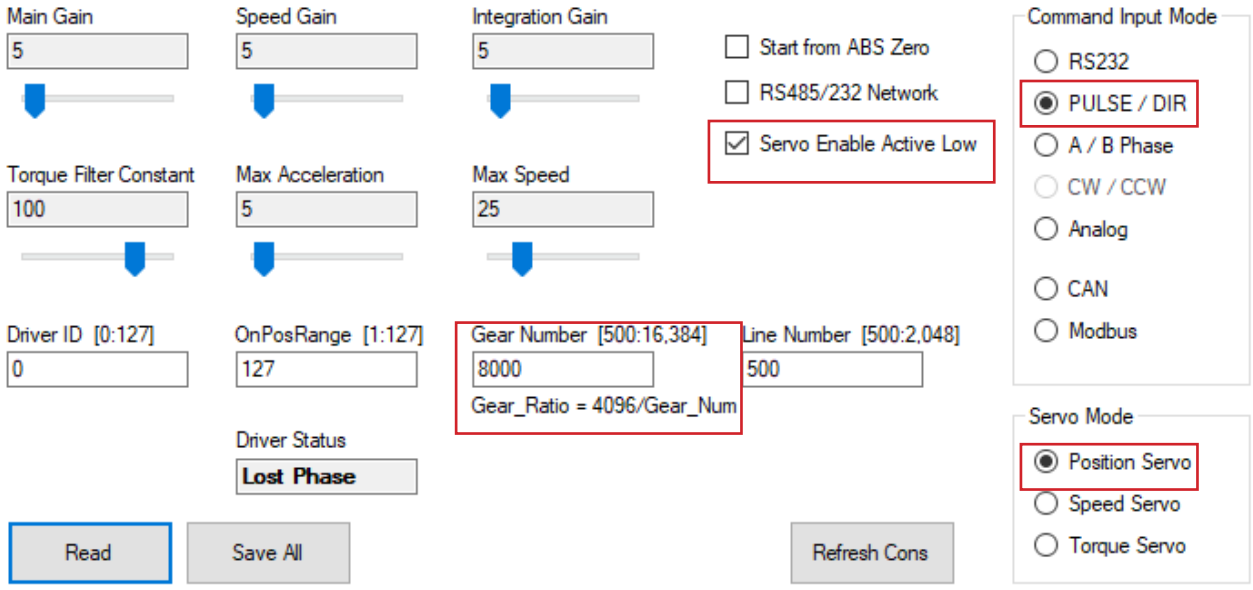

Acorn Setting

1. Set Acorn Steps Per Rev to 8000

	Axis 1
Linear or Rotary	Linear
Label	X
Steps / Revolution	8000

2. Set Acorn Pulse Frequency 400kHz
3. Set Acorn Alarm IN5 to NO, do not invert Enable
4. For first bench tests, set all inputs to Unused except DriveOk and EStopOk

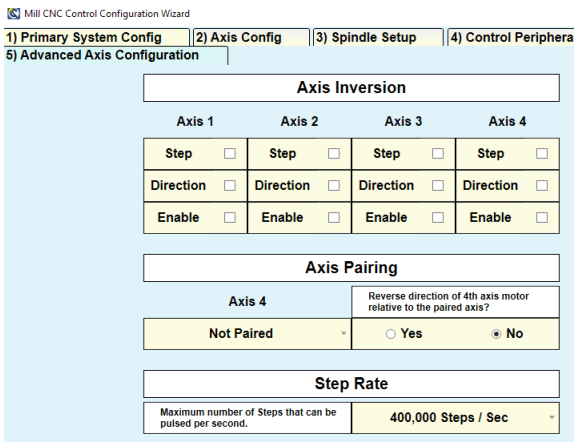

Custom DMM DYN2/DYN4 Input and Output Map

Note: Modify this I/O assignment *only if* different Input and Output assignments are required. Otherwise, follow these standard I/O assignments which match the standard Acorn hookup schematics.

	PLC Name	Input Type		
Input 1	Unused	NC	Output 1	NoFaultOut
Input 2	Unused	NC	Output 2	Lube
Input 3	Unused	NC	Output 3	SpindleBrakeRelease
Input 4	Unused	NC	Output 4	SpinFWD
Input 5	DriveOk	NO	Output 5	SpinREV
Input 6	Unused	NC	Output 6	DriveResetOut
Input 7	Unused	NC	Output 7	Flood
Input 8	EStopOk	NO	Output 8	TurnClampOn

5. Set Parameter P991 to “1”

Electrical Specification

- Contactor: Fuji SC-E03-24VAC or equivalent per servo drive

- NF2 Main Noise Filter: Schaffner FN2030-20-06

- NF1 Logic Noise Filter: Schaffner FN2030-1-06

- Servo drive AC input wire: 18~20AWG recommended

- Circuit Breaker:

Servo Drive	Breaker Current	Example
DYN4-L01	10A	FAZ-C10-3-NA or equivalent
DYN4-H01	20A	FAZ-C20-3-NA or equivalent
DYN4-T01	20A	FAZ-C20-3-NA or equivalent

- When using 220/240VAC input, recommended to connected AC line reactor:

Servo Drive	Rated Current	Example
DYN4-L01	3.5A	LR-20P5 or equivalent
DYN4-H01	8.0A	LR-22P0 or equivalent
DYN4-T01	14.7A	LR-23P0 or equivalent

* For multi-axis applications, one reactor can be shared between multiple drives.
Select the reactor size according to the total combined drive rated current.

DYN4 Servo Drive to Acorn Cable

Part# **CA-CUACRN-M4-05**

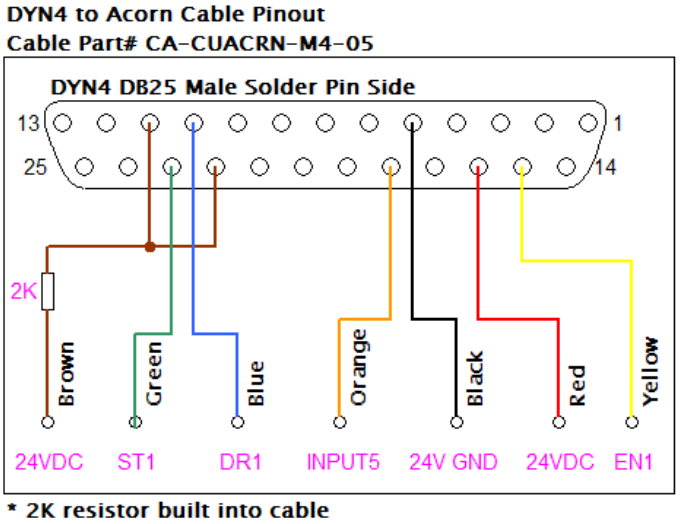

NOTE
In Revision B of the CA-CUACRN-M4-05 cable, the pinout/colour is as below:

Colour	White	Green	Green/Black	Yellow/Black	Black	Red	Yellow
Signal	24VDC	ST1	DR1	IN5	24V GND	24VDC	EN1

DYN4 AC Servo Drive to Centroid Acorn

Drawing# 5040426

Aug 30, 2018 - R2.2

Notes:
- Set DYN4 servo drive Enable logic to ACTIVE LOW
- Set DYN4 servo drive into Pulse/Dir Command Input Mode
- Set DYN4 servo drive into Position Servo Mode
- Set GEAR_NUM to 8000
- Set Acorn Steps Per Rev to 8000
- Set Acorn Pulse Frequency 400kHz
- Set Acorn Alarm IN5 to NO, do not invert Enable
- Contactor: Fuji SC-E03-24VAC
- NF1 Logic Noise Filter: Schaffner FN2030-1-06
- NF2 Main Noise Filter: Schaffner FN2030-20-06
- Circuit Breaker: 10A (DYN40L01) * Per Drive
  20A (DYN4-H01,T01)* Per Drive
  * 20A Example: Eaton FAZ-C20-3-NA
- AC Reactor recommended when using 220/240VAC

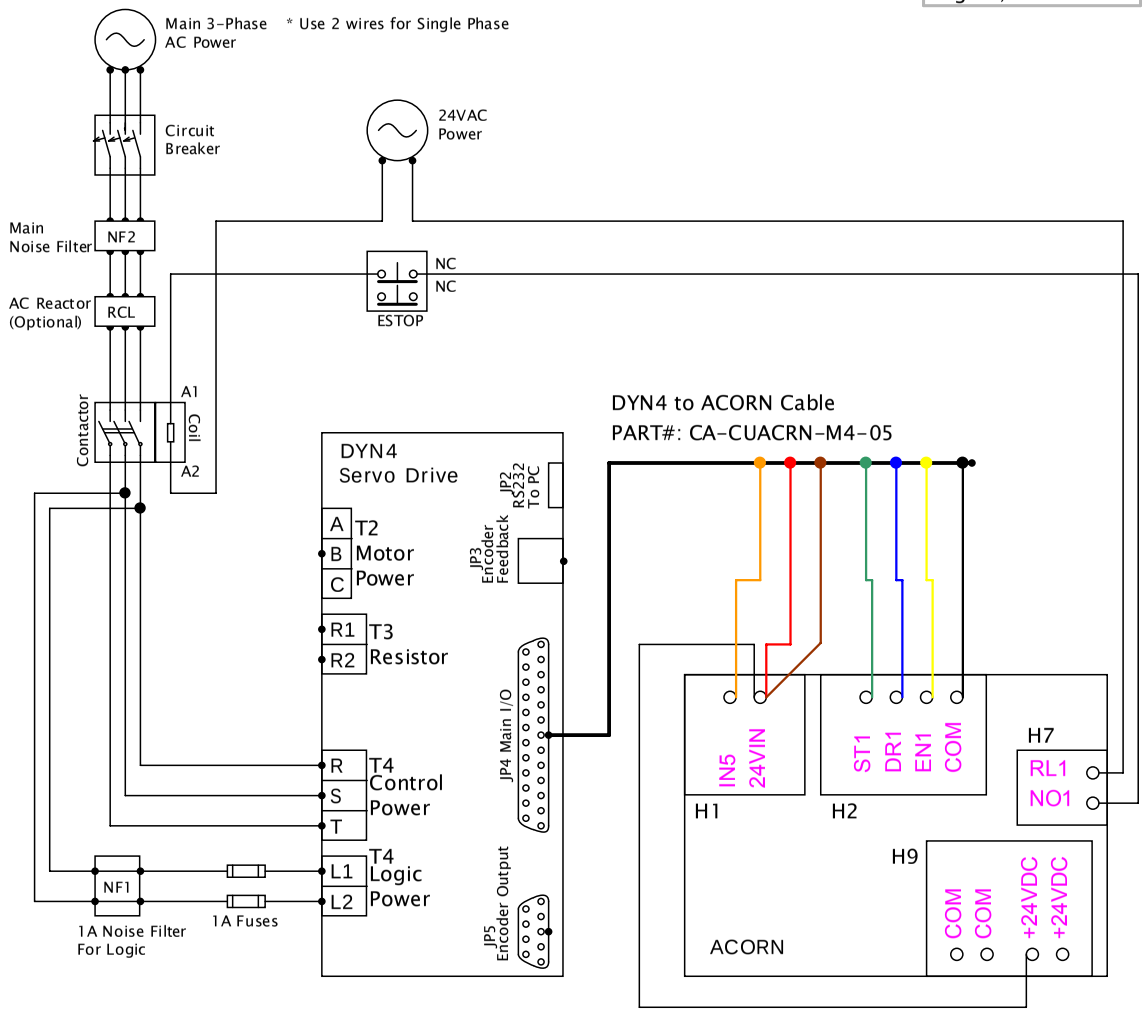

DYN4 to Acorn Cable Pinout
Cable Part# CA-CUACRN-M4-05

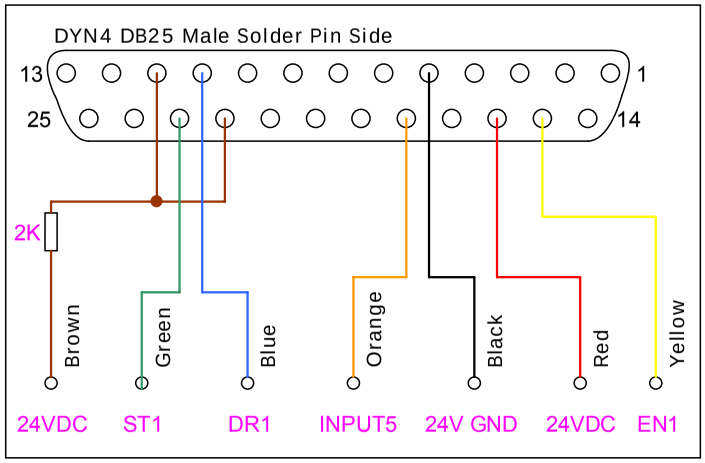

* 2K resistor built into cable

NOTE
In Revision B of the CA-CUACRN-M4-05 cable, the pinout/colour is as below:

Colour	White	Green	Green/Black	Yellow/Black	Black	Red	Yellow
Signal	24VDC	ST1	DR1	IN5	24V GND	24VDC	EN1

Responsible dep.	Technical reference	Created	Approved	
		--		
Dynamic Motor Motion Technology Corporation		Document type	Document status: RELEASE	Rev. 2.2
		Title, supplementary title	5040426	Scale
			Date of issue	Lang. / Sheet 1/3

Multiple Servo Drive Input Power Wiring

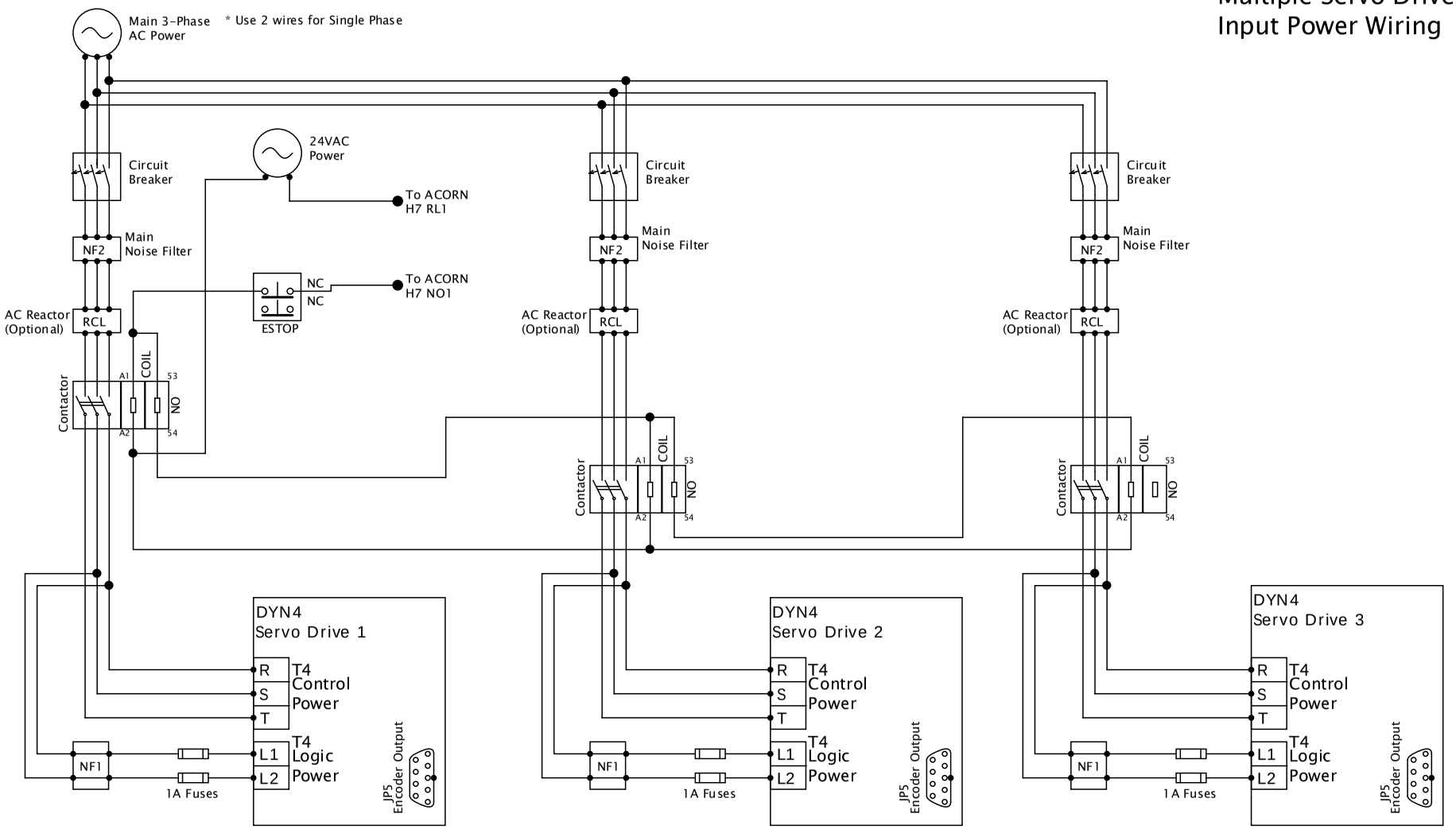

Notes:
- Contactor: Fuji SC-E03-24VAC with SZ-A20T Auxiliary Contact Block
- SZ-A20T Auxiliary Contact Block has 2NO contacts

Responsible dep.	Technical reference	Created	Approved	
		--		
Dynamic Motor Motion Technology Corporation		Document type	Document status: **RELEASE**	Rev. **2.2**
		Title, supplementary title	**5040426**	Scale
			Date of issue	Lang. / Sheet **2/3**

Single Phase Input Example

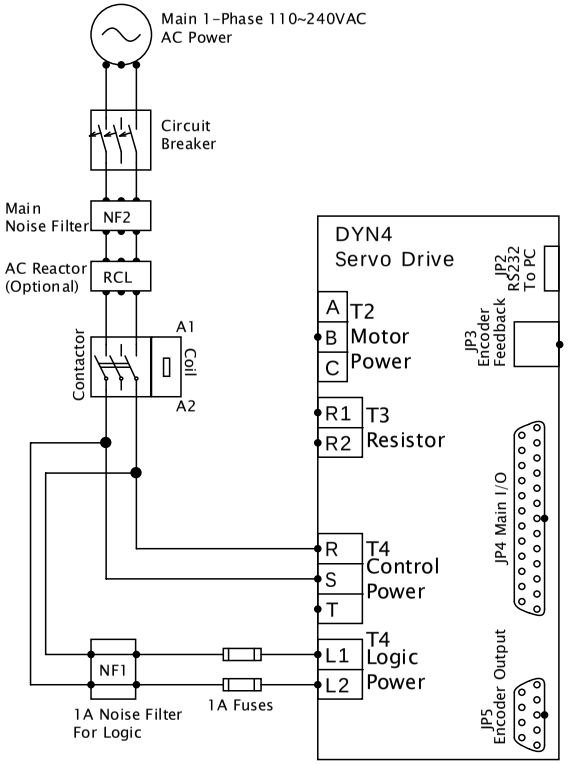

Responsible dep.	Technical reference	Created	Approved	
		--		
Dynamic Motor Motion Technology Corporation		Document type	Document status: **RELEASE**	Rev. **2.2**
		Title, supplementary title	**5040426**	Scale
			Date of issue	Lang. / Sheet **3/3**

Sample Acorn Connection

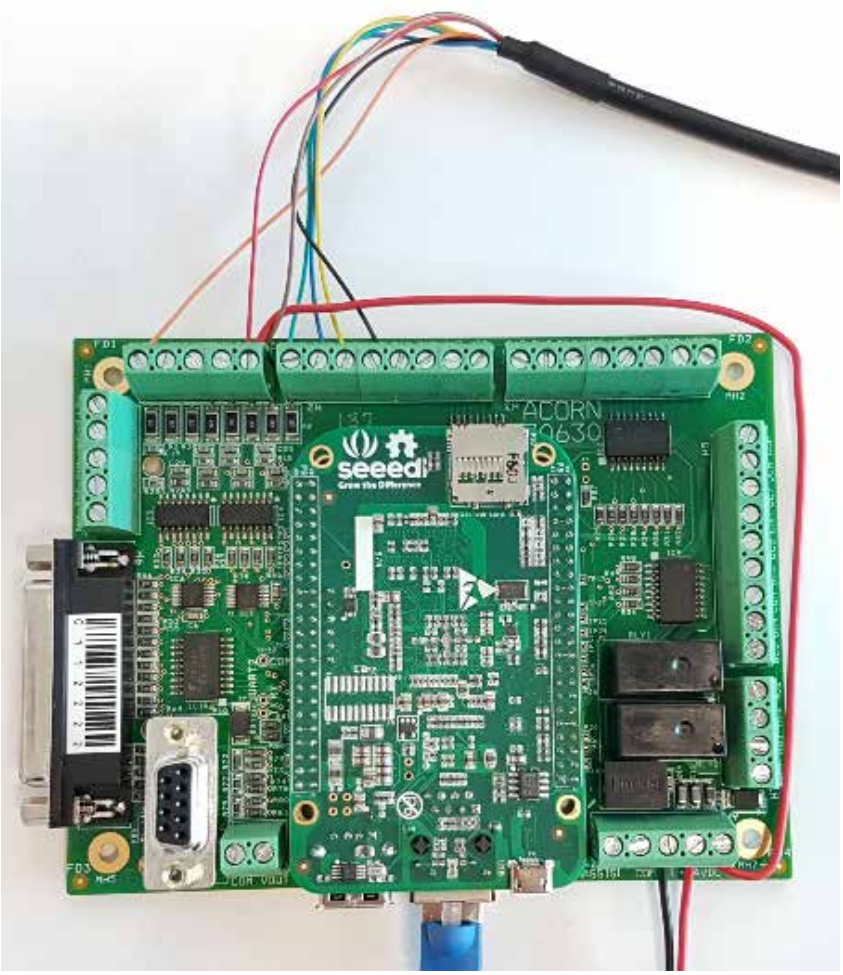

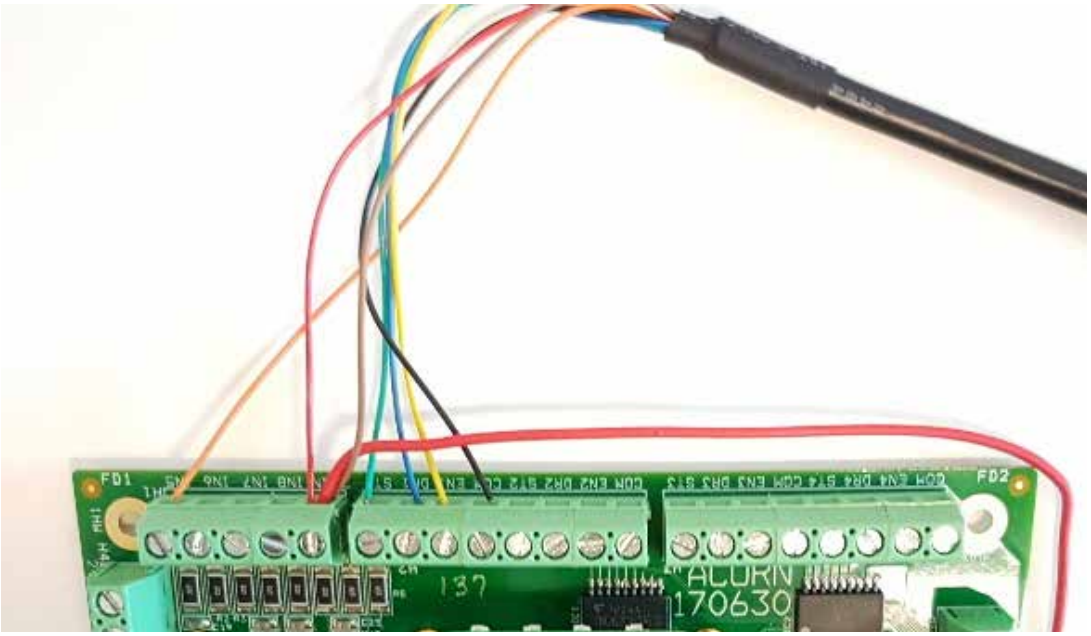

NOTE

In Revision B of the CA-CUACRN-M4-05 cable, the pinout/colour is as below:

Colour	White	Green	Green/Black	Yellow/Black	Black	Red	Yellow
Signal	24VDC	ST1	DR1	IN5	24V GND	24VDC	EN1